Assembly Doctor for BISECTOR THEOREM

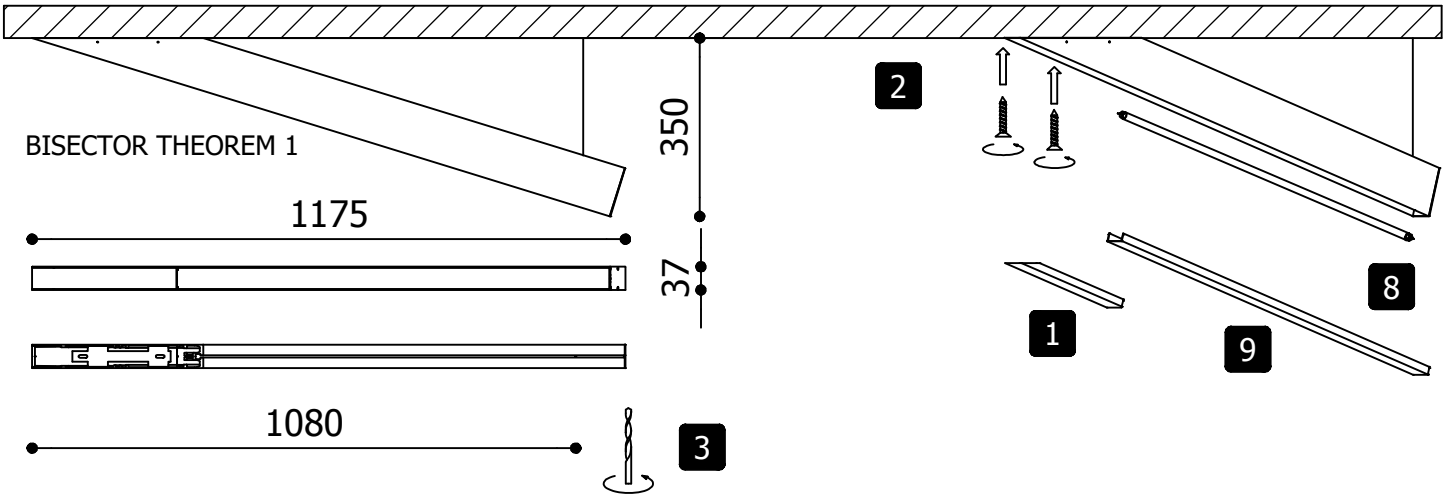

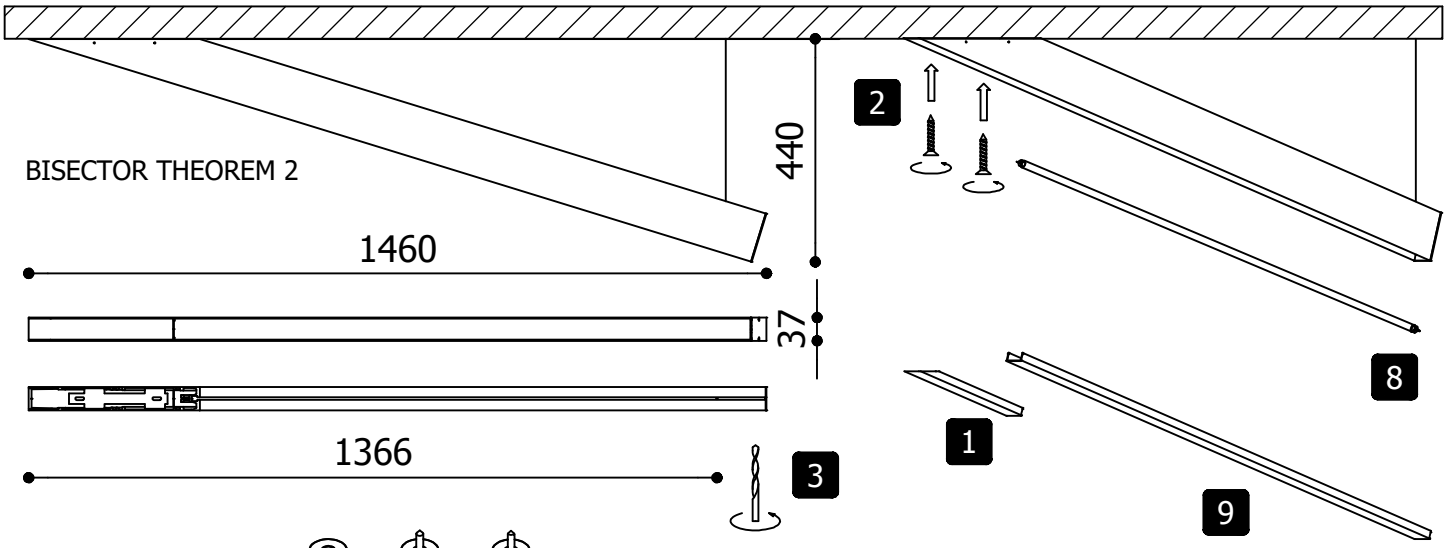

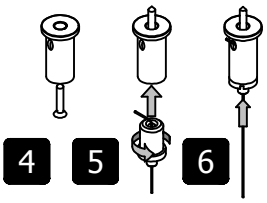

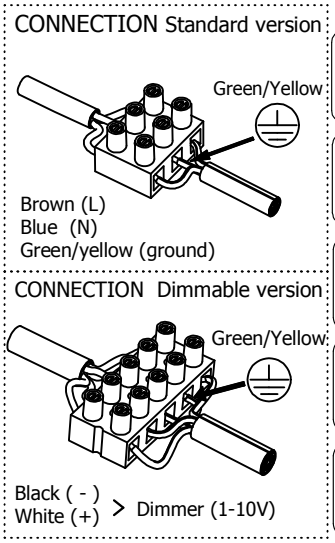

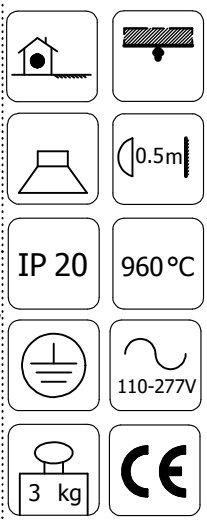

1. Carefully remove the cover plate and the diffuser plate.
2. Mount the fixture to the ceiling using two screws.
3. Drill a hole in the ceiling at the propper distance for the gripper.
4. Screw the gripper body onto the ceiling.
5. Turn the adjuster into the gripper body.
6. Lock the cables on the respected height.
7. Connect to power supply.
8. (Re)place lamps, respect wattage.
9. Carefully reattach cover plate and diffuser plate.

BYIBA BACKLIGHT

BISECTOR THEOREM 1					BISECTOR THEOREM 2				
21 Watt	G5	NO DIM			**28** Watt	G5	NO DIM		
39 Watt	G5	NO DIM	1 ... 10V	DALI	**54** Watt	G5	NO DIM	1 ... 10V	DALI