Assembly doctor for MR.BEAM 2 S

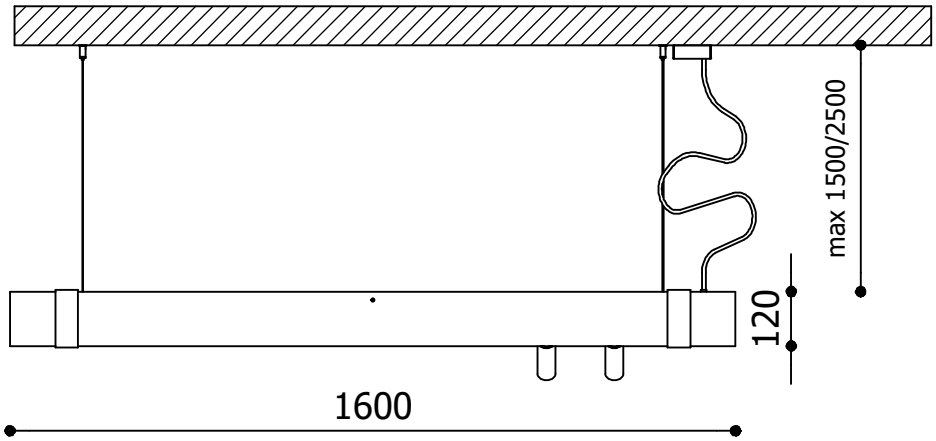

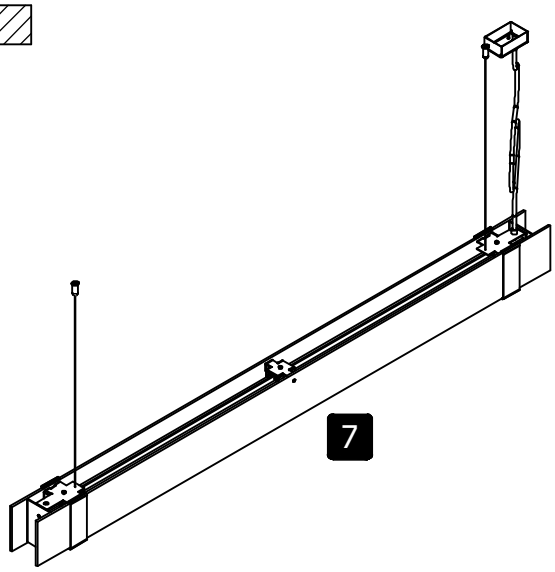

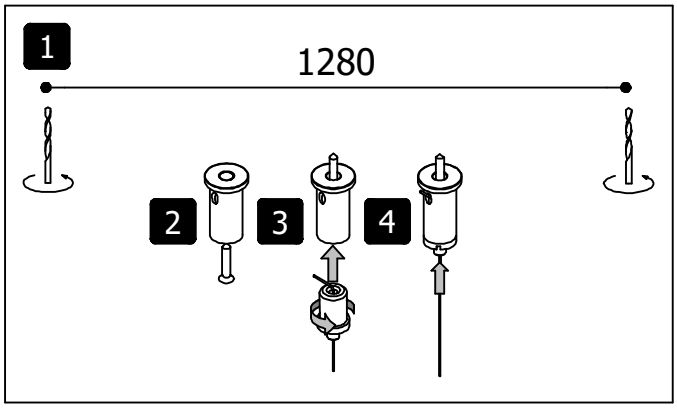

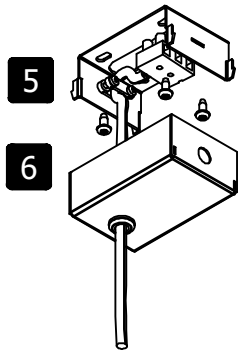

CONNECTION Standard version

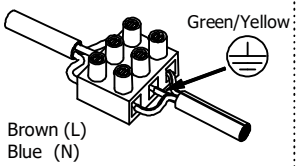

Brown (L)
Blue (N)
Green/yellow (ground)

CONNECTION Dimmable version

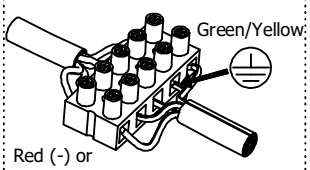

Red (-) or
Black (-)
White (+) > Dimmer (1-10V)

1. Drill two holes in the ceiling at the propper distance for the gripper.
2. Screw the gripper bodies onto the ceiling.
3. Turn the adjuster into the gripper bodies.
4. Lock the cables on the respected height.
5. Mount the ceiling bracket onto the ceiling.
6. Connect the power supply and close the ceiling base.
7. [excl. LED-version] (Re)place the lamp, respect wattage.

Lamp possibilities:

1x	G5	T5 Seamless	**21** Watt	NO DIM	DALI			
or								
1x	G5	T5 Seamless	**39** Watt	NO DIM	1 ... 10V	DALI		
or								
	LED	**>80** CRI	mA	Lm	**13** Watt	2700 K / 3000 K	NO DIM	
2x	LED	**>85** CRI	**350** mA	**600** Lm	**7.2** Watt	2700 K	NO DIM	

650°C

IP 20 | 0.3m | 8 kg

BYIBA BACKLIGHT