Assembly Doctor for METROLINE S

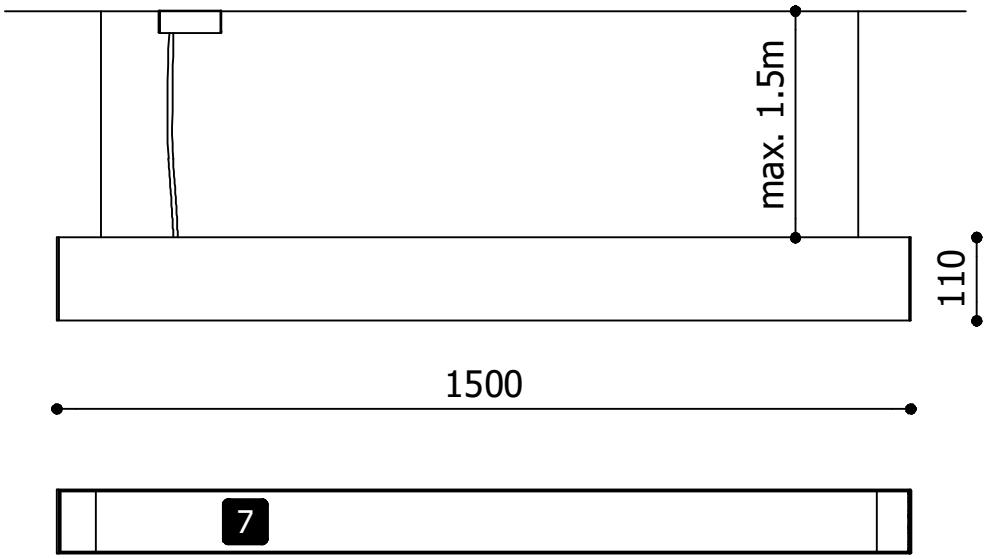

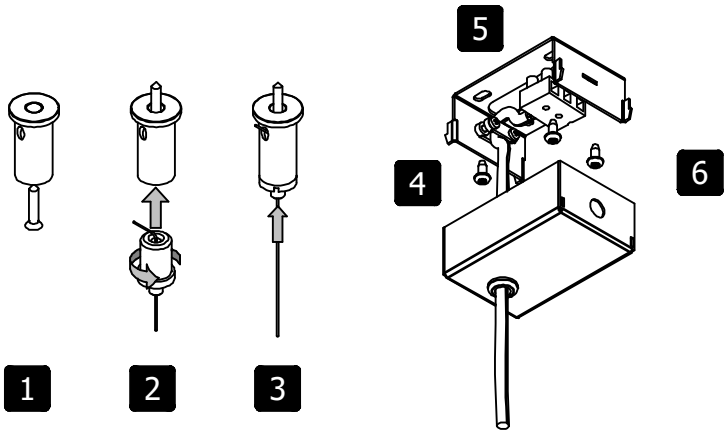

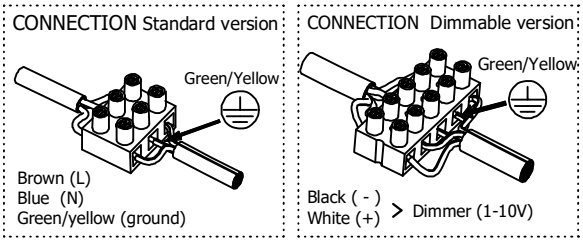

1. Screw the gripper body onto the ceiling.
2. Turn the adjuster into the gripper body.
3. Lock the cables on the preferred height.
4. Mount the ceiling bracket with four screws onto the ceiling.
5. Adjust the fixture to the preferred height and fasten the strainrelief.
6. Connect the power supply and close the ceiling base.
7. Carefully remove protective film
8. Turn on the power

BYIBA
BACKLIGHT

110-277 V

960 °C

IP 20

0.3m

9 kg

LED | >80 CRI | 9500 Lm | 62 Watt | NON DIM | 1 ... 10V | DALI | INCL DRIVER